CODE: OUT-OPTILINK

PRODUCT DATA	
MATERIAL	ABS
HEIGHT (B)	80 mm
LENGHT (A)	80 mm
DEPTH (C)	28,5 mm
COLOR	RAL 9016
FLAMABILITY GRADE	UL94 V0

PRODUCT DESCRIPTION

Fiber wall outlet with a 10/20/30/40 meters SC/LC-APC patch cord connected to an adapter. The patch cord is coiled up inside the outlet on a rotating spool that allows it to be stored inside the outlet as well as unwound to the outside. Optilink can be used to bring a fiber optic Internet connection to any room in the house, thanks to its cable that can be extended up to 40 meters.

PRODUCT FEATURES:

- 2 outputs on each side compatible with 4/5mm Silway® sistem
- Transparent PA12 Raw material 900 µm diameter jacket patch cord fiber ITU-T G.657 A2
- 10-, 20-, 30- and 40-meters patch cord fiber avaible
- SC-APC and LC-APC patchcord-adapter avaible
- Possibility to lock/unlock the reel rotation
- Removable reel from the base
- Possibility of handling the fiber cabling above the top disk of the reel.
- Adapter can face any side of Optilink ensuring up to 32 different installation configurations
- Accessories kit for wall mounting (2 pcs screw and 2 pcs wall plug)
- Material ABS UL94-V0
- IZOD impact resistance ≥ 20 N/m (EN ISO 180:2013)

Via degli Olmetti, 39D – 00060 Formello (RM)

COMPONENTS:

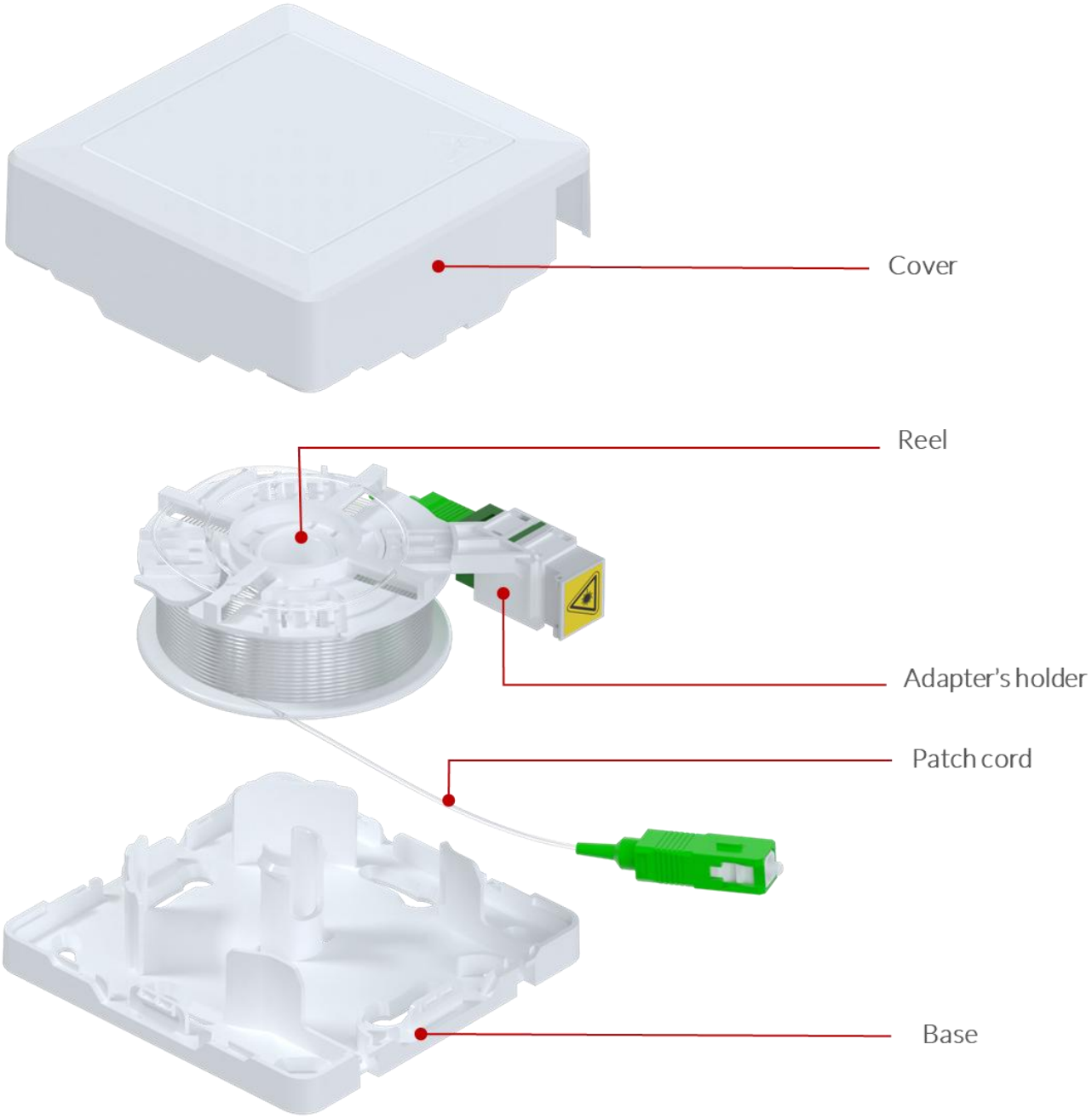

Via degli Olmetti, 39D – 00060 Formello (RM)

TWO DIFFERENT OUTPUTS FOR THE PATCH CORD:

LEFT OUTPUT

RIGHT OUTPUT

FOUR DIFFERENT INPUTS LAYOUT:

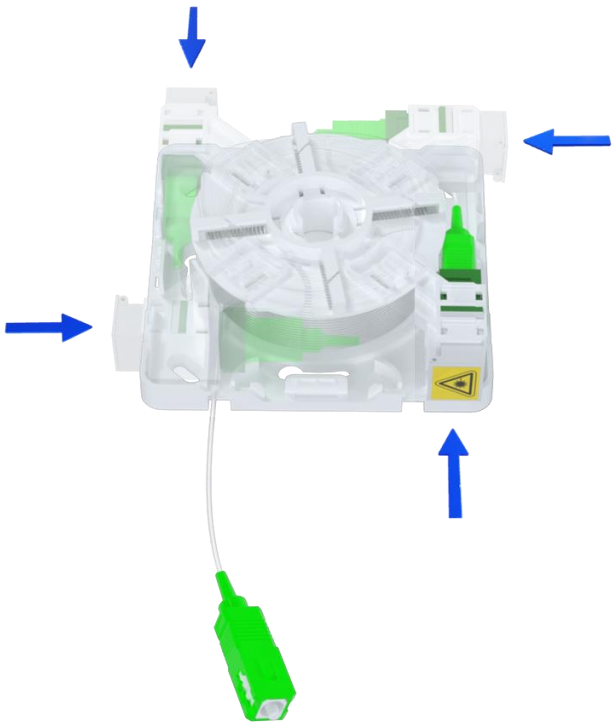

Via degli Olmetti, 39D – 00060 Formello (RM)

UP TO 32 DIFFERENT INSTALLATION CONFIGURATIONS:

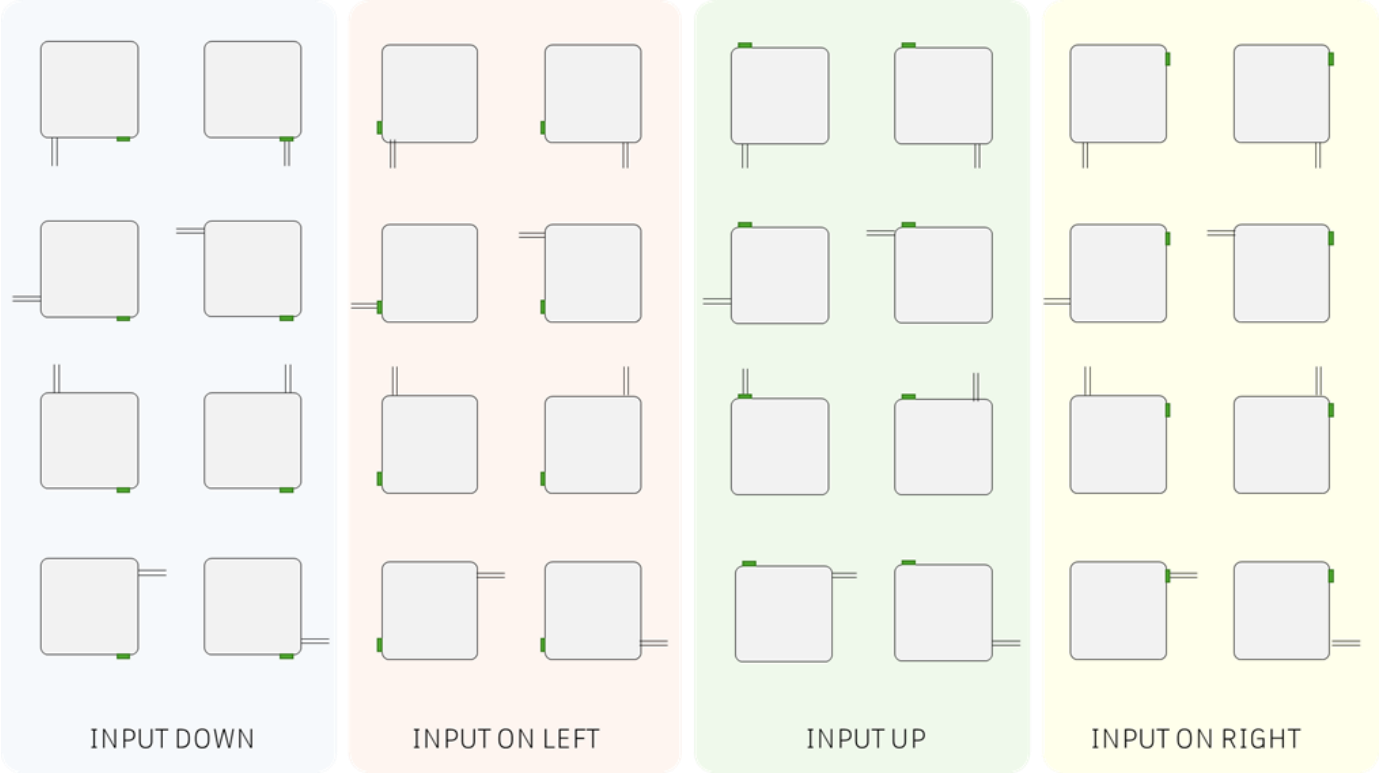

POSSIBILITY TO LOCK/UNLOCK REEL ROTATION:

LOCKED ROTATION

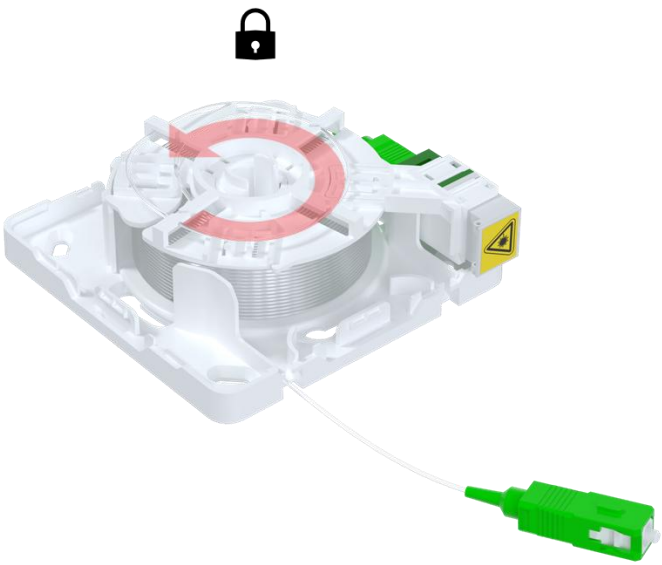

FREE ROTATION

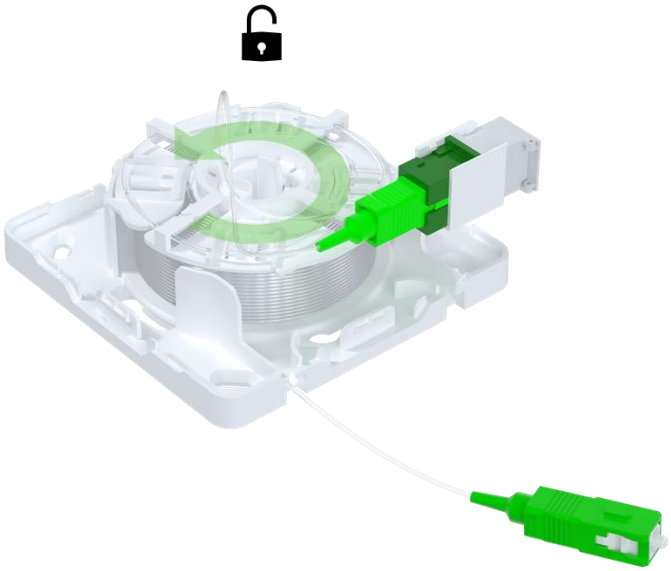

Via degli Olmetti, 39D – 00060 Formello (RM)

POSSIBILITY OF HANDLING THE FIBER CABLING ABOVE THE DISK OF THE REEL:

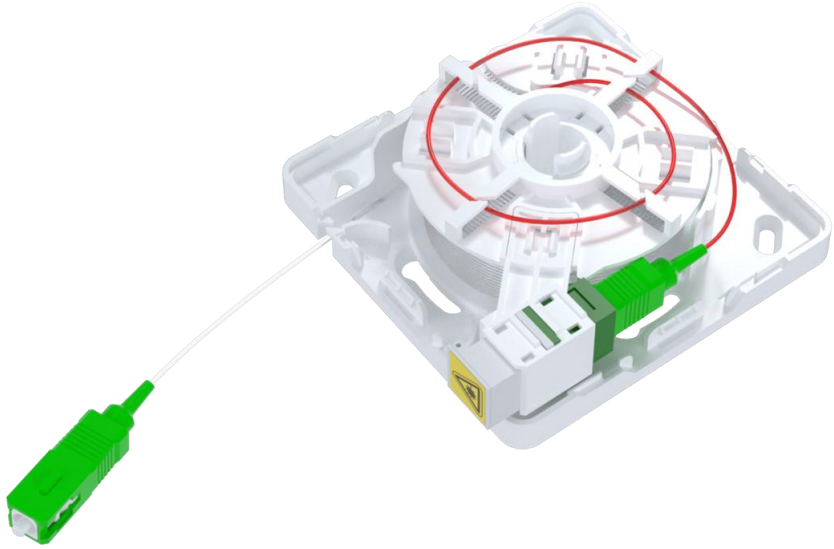

DRAWINGS:

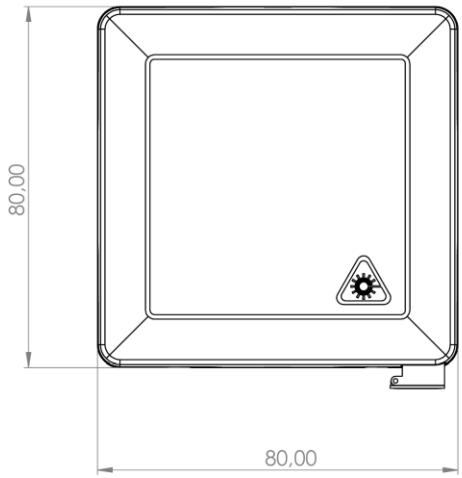

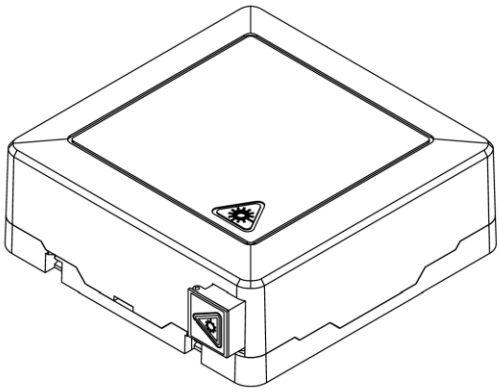

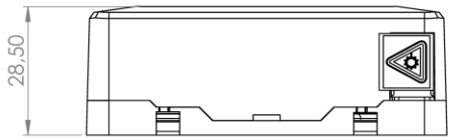

Via degli Olmetti, 39D – 00060 Formello (RM)